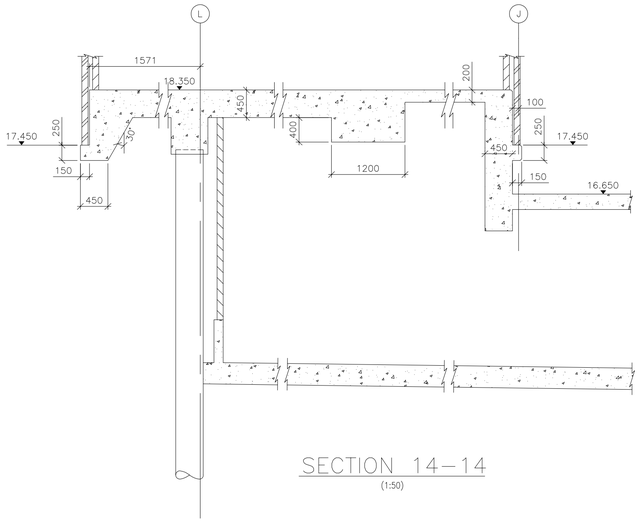


SECTION 14–14
(1:50)

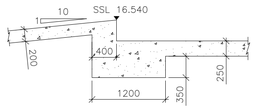


SECTION 15–15
(1:50)

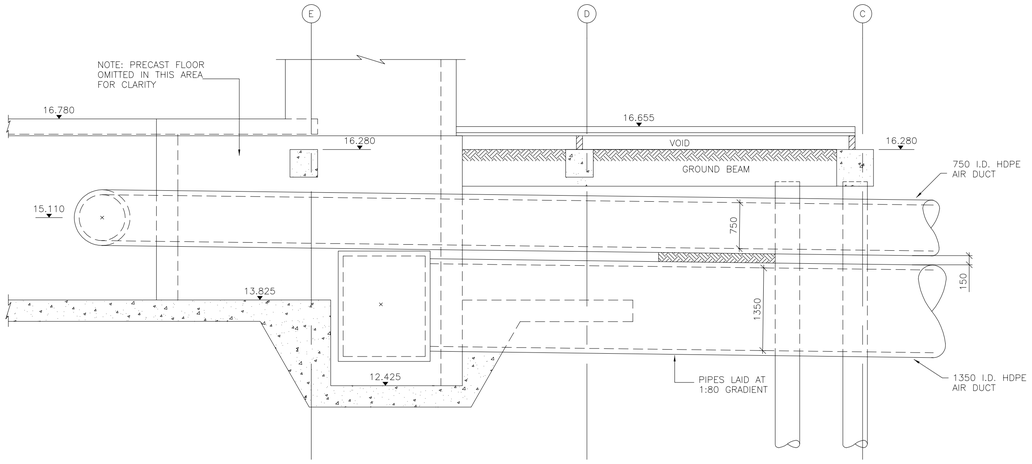


SECTION 16–16
(1:50)

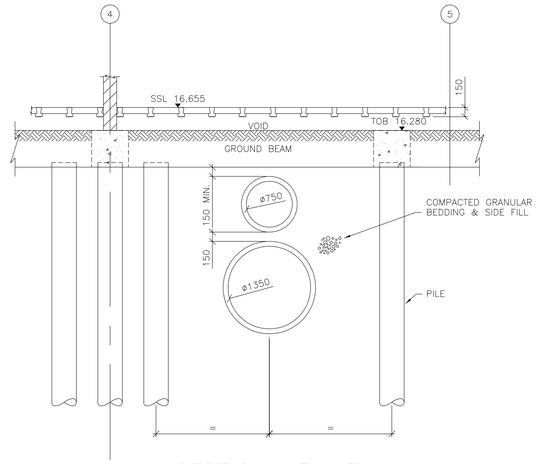


SECTION 17–17
(1:50)

NOTES.

1. GENERAL

(i) This drawing is not to be scaled, work to figured dimensions only, confirmed on site.

(ii) This drawing is to be read in conjunction with all relevant architectural drawings, detailed specifications where applicable and all associated drawings in this series.

(iii) Any discrepancy on this drawing is to be reported immediately to the partnership for clarification.

(iv) The contractor is responsible for all temporary works and for the stability of the works in progress.

| Revision | Date | By | Rev. No. |
|---|---|---|---|
| SECTIONS 14–14, 15–15, AND 16–16 AMENDED | 17/08/00 | A.D.COOK | F |
| SECTION 16–16 AMENDED | 12/06/00 | A.GALIFOU | E |
| SECTIONS AMENDED TO ACCOMMODATE BEAM & BLOCK FLOOR | 31/03/00 | M.PACIFICO | D |
| CONTIGUOUS PILE WALL ADDED TO SECTION 14. AMENDMENTS TO SECTIONS 13 & 14 | 13/03/00 | M.PACIFICO | C |
| SECTIONS AMENDED TO SUIT REVISED PLAN | 26/01/00 | M.PACIFICO | B |
| SECTIONS 15–17 ADDED. ISSUED FOR TENDER | 03/12/99 | M.PACIFICO | A |
| FIRST ISSUE | 29/11/99 | M.PACIFICO | |

Client
BERKELEY HOMES (SOUTHERN) LTD

Project
24–30 MARINE PARADE,
BRIGHTON, EAST SUSSEX

Title
BASEMENT & GROUND FLOOR SECTIONS
SHEET 2.


HEMSLEY ORRELL PARTNERSHIP
CONSULTING CIVIL & STRUCTURAL ENGINEERS

● HOP HOUSE, 41 Church Road,
Hove, East Sussex
BN3 2BE
Tel : (01273) 223900
Fax : (01273) 326767
Email : hophove@dial.pipex.com

○ 151 Western Road,
Haywards Heath, West Sussex
RH16 3LH
Tel : (01444) 457756
Fax : (01444) 455953
Email : hop.hh@virgin.net


| Scales | Date | Drawn | Engineer | Checked | Approved |
|---|---|---|---|---|---|
| 1:100, 1:50 | NOV 1999 | M.PACIFICO | A.HUMPHREY | D.JONES | D.JONES |

| Project No. | Task No. | Dwg. No. | Rev. No. |
|---|---|---|---|
| 8459 | 02 | 121 | F |

© Copyright